OLB-340-10
2.20-3.30GHz Standard Gain Horn Antenna

一、Description

Frequency Range(GHz)	2.20 - 3.30
Gain(dB)	10 Typ.
3dB Beamwidth(deg)	55 Typ.
Waveguide	WR340
Material	Al
Output	A Type: FDP26 C Type: N-F or SMA-F or 7/16-F
Size(mm) W x H x L	A Type: 163x123x270 C Type: 163x123x362
Net Weight(Kg)	A Type: 0.7 Around C Type: 1.5 Around

二、Dimension(mm)

Beijing Ocean Microwave Co Ltd.
TEL：+86-10-60290088
FAX：+86-10-60290088
http://oceanmicrowave.com
E-mail: sales@oceanmicrowave.com

A Type

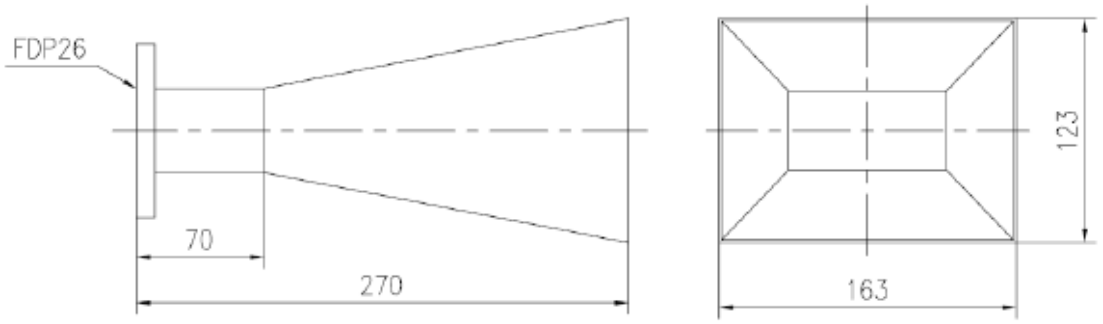

W x H x L: 163x123x270

C Type

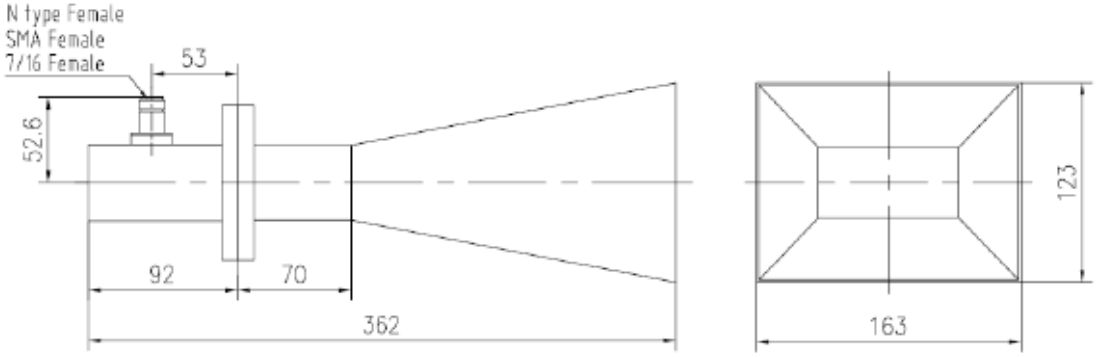

W x H x L: 163x123x362

三、Flange Drawing(mm)

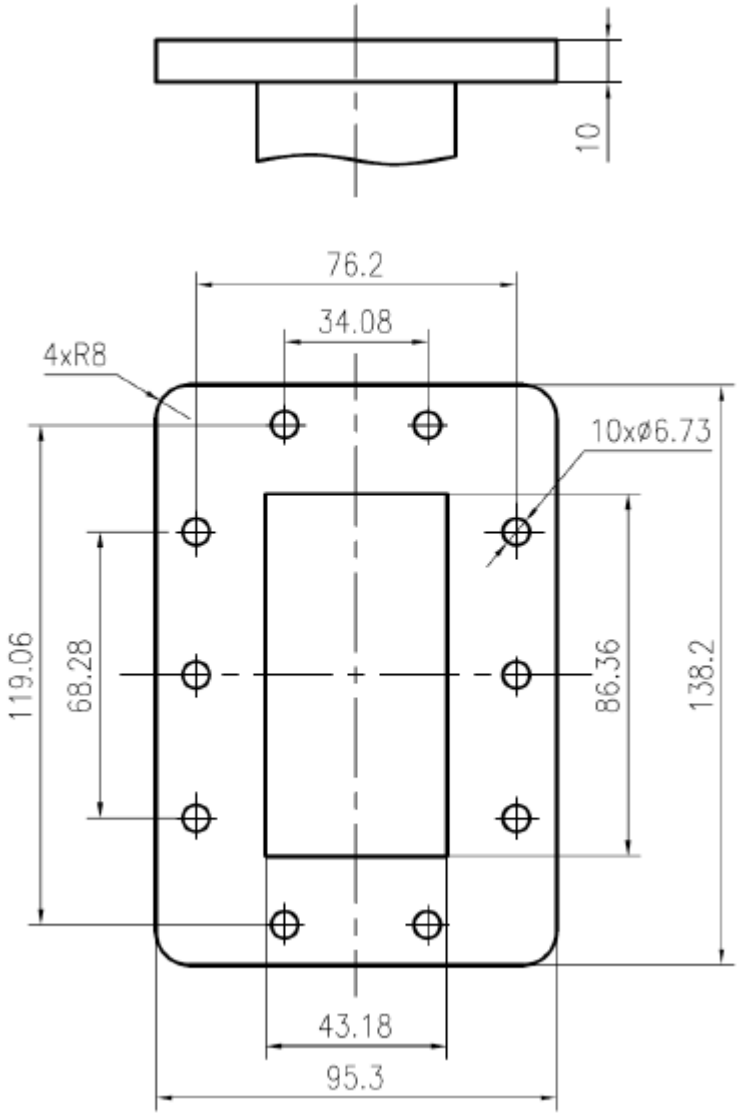

四、Test Result

1、Gain&Frequency

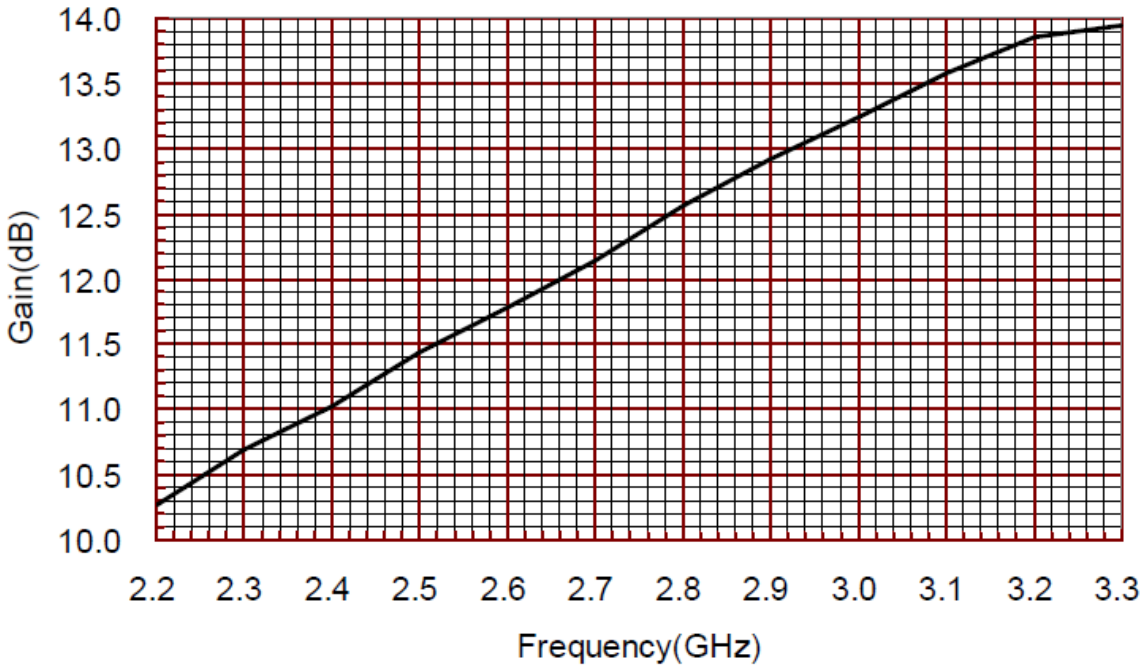

2、Antenna Factor

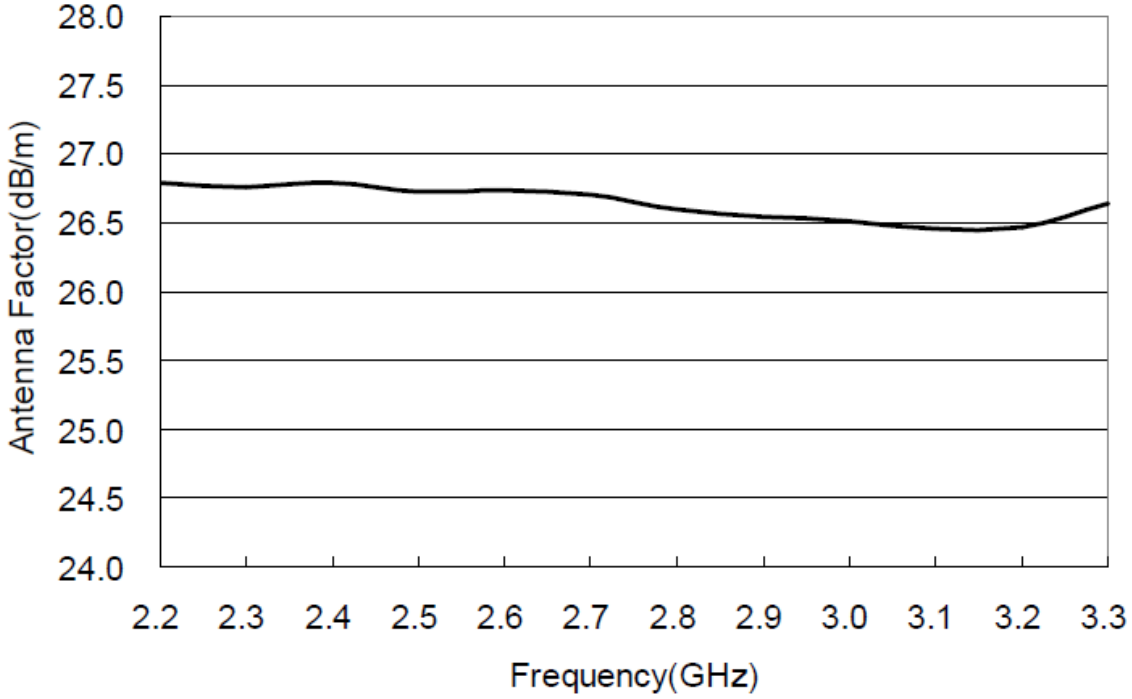

Frequency(GHz)	Gain(dB)	Antenna Factor(dB/m)
2.2	10.27	26.79
2.3	10.69	26.75
2.4	11.03	26.78
2.5	11.44	26.73
2.6	11.78	26.73
2.7	12.14	26.70
2.8	12.56	26.59
2.9	12.92	26.54
3.0	13.24	26.51
3.1	13.58	26.46
3.2	13.85	26.46
3.3	13.94	26.64

3、VSWR

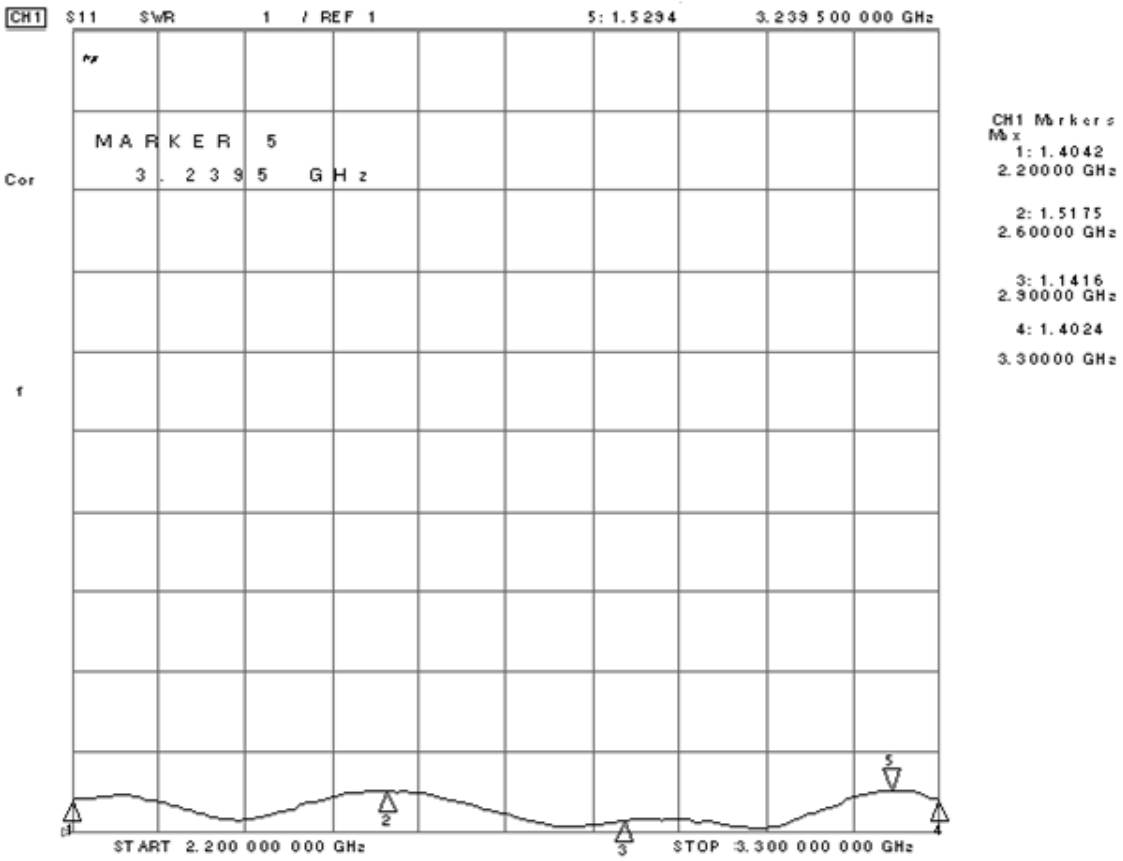

4、Cross Polarization Isolation

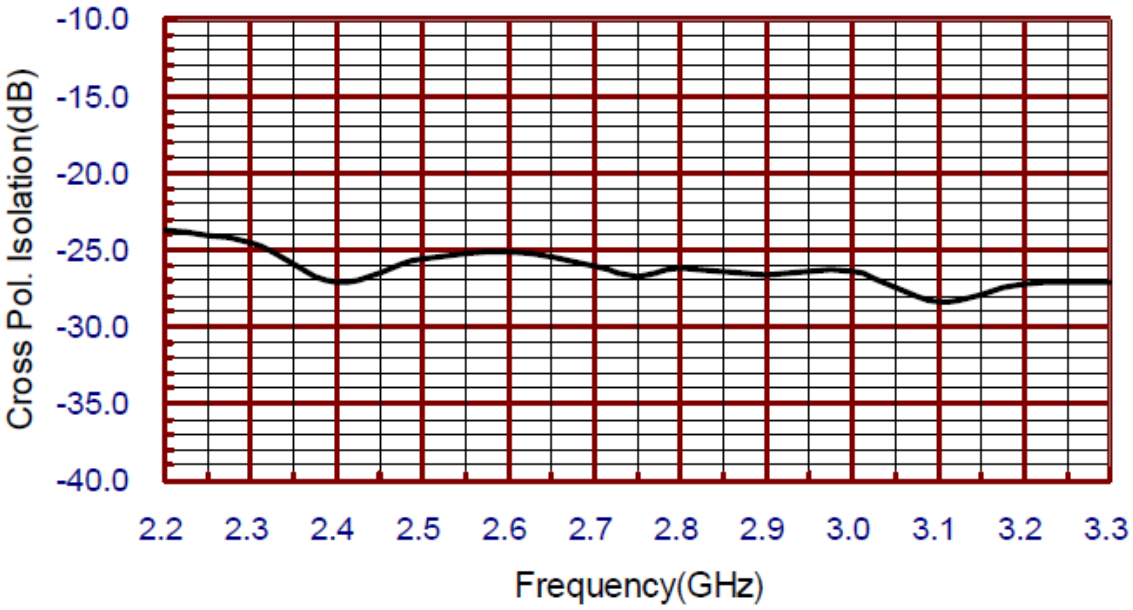

5、Pattern

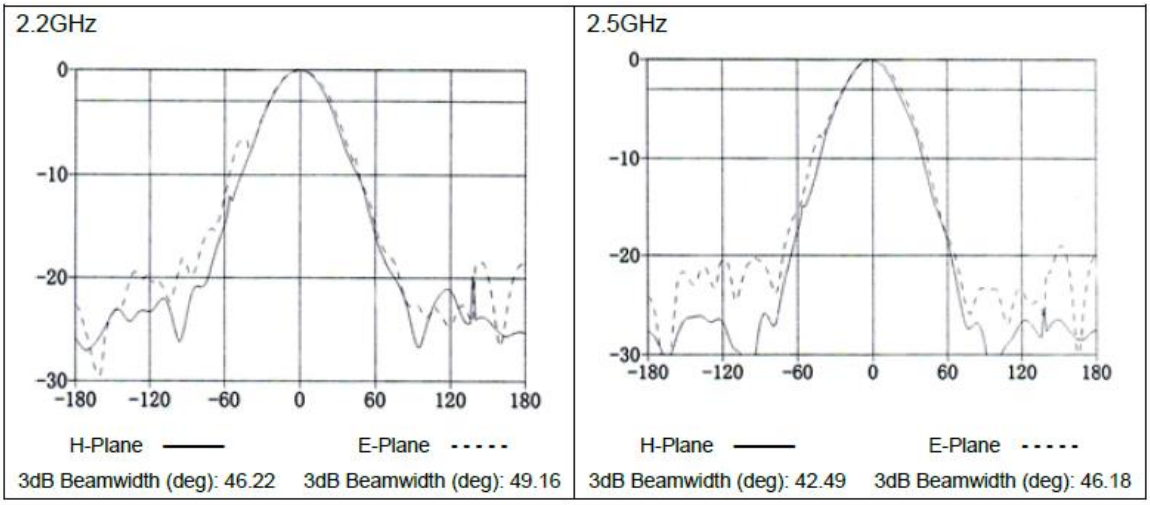

2.20-3.30GHz Standard Gain Horn Antenna

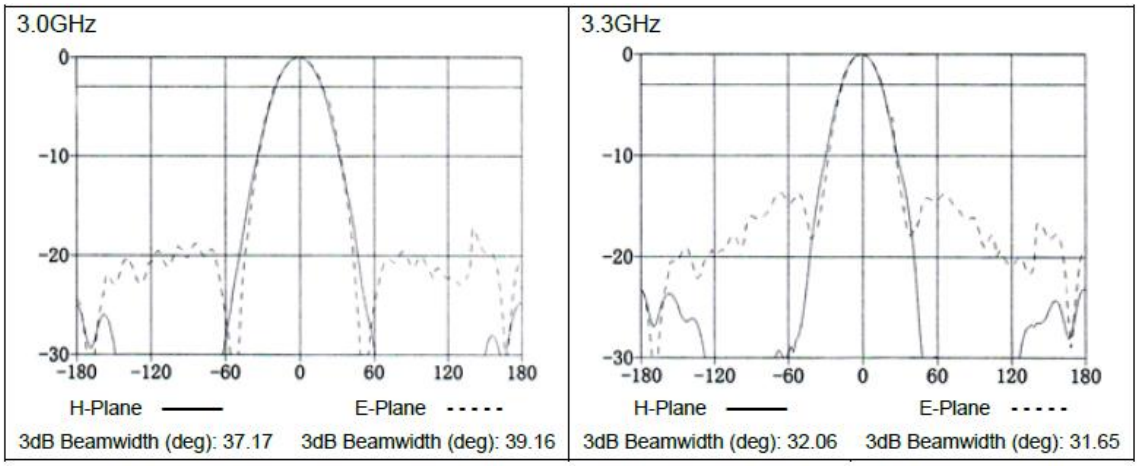

Beijing Ocean Microwave Co Ltd.
TEL：+86-10-60290088
FAX：+86-10-60290088
http://oceanmicrowave.com
E-mail: sales@oceanmicrowave.com