OCEAN MICROWAVE

OLB-75-20
10-15GHz Standard Gain Horn Antenna

一、Description

Frequency Range(GHz)	10.0 - 15.0
Gain(dB)	20 Typ.
3dB Beamwidth(deg)	18 Typ.
Waveguide	WR75
Material	Al
Output	A Type: FBP120 C Type: N/SMA/3.5mm/TNC/7mm
Size(mm) W x H x L	A Type: 103x83x155 C Type: 103x83x185
Net Weight(Kg)	A Type: 0.20 Around C Type: 0.25 Around

二、Dimension(mm)

Beijing Ocean Microwave Co Ltd.
TEL：+86-10-60290088
FAX：+86-10-60290088
http://oceanmicrowave.com
E-mail: sales@oceanmicrowave.com

A Type

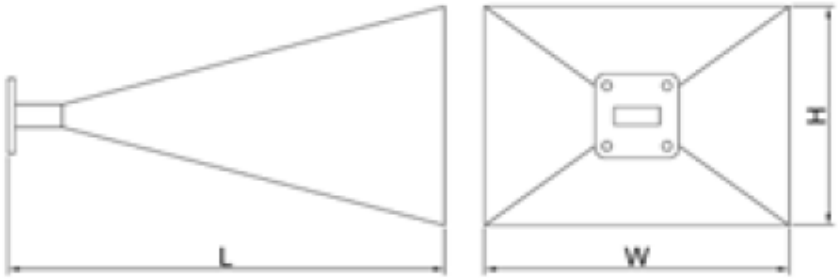

W x H x L: 103x83x155

C Type

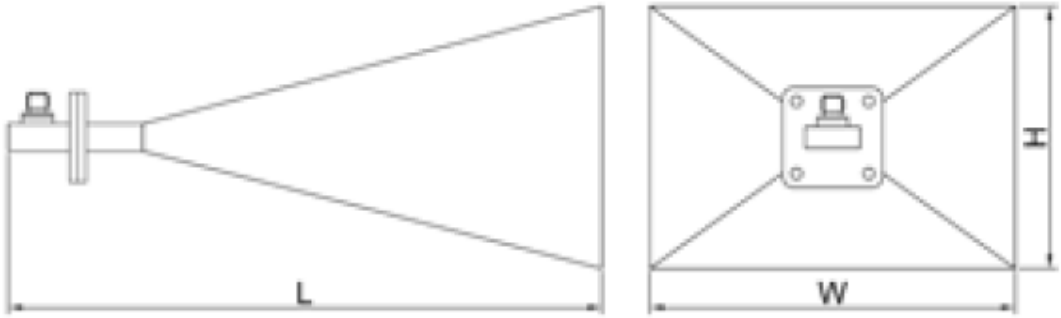

W x H x L: 103x83x185

三、Flange Drawing(mm)

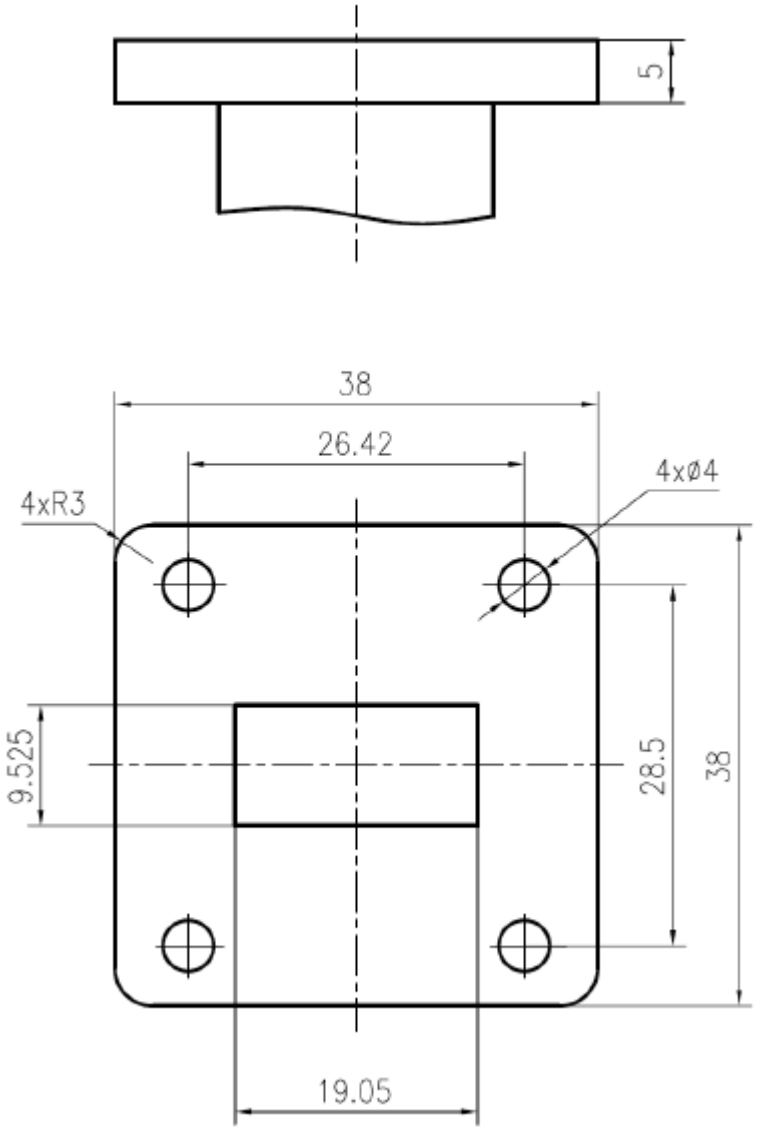

四、**Test Result**

1、Gain&Frequency

Beijing Ocean Microwave Co Ltd.
TEL：+86-10-60290088
FAX：+86-10-60290088
http://oceanmicrowave.com
E-mail: sales@oceanmicrowave.com

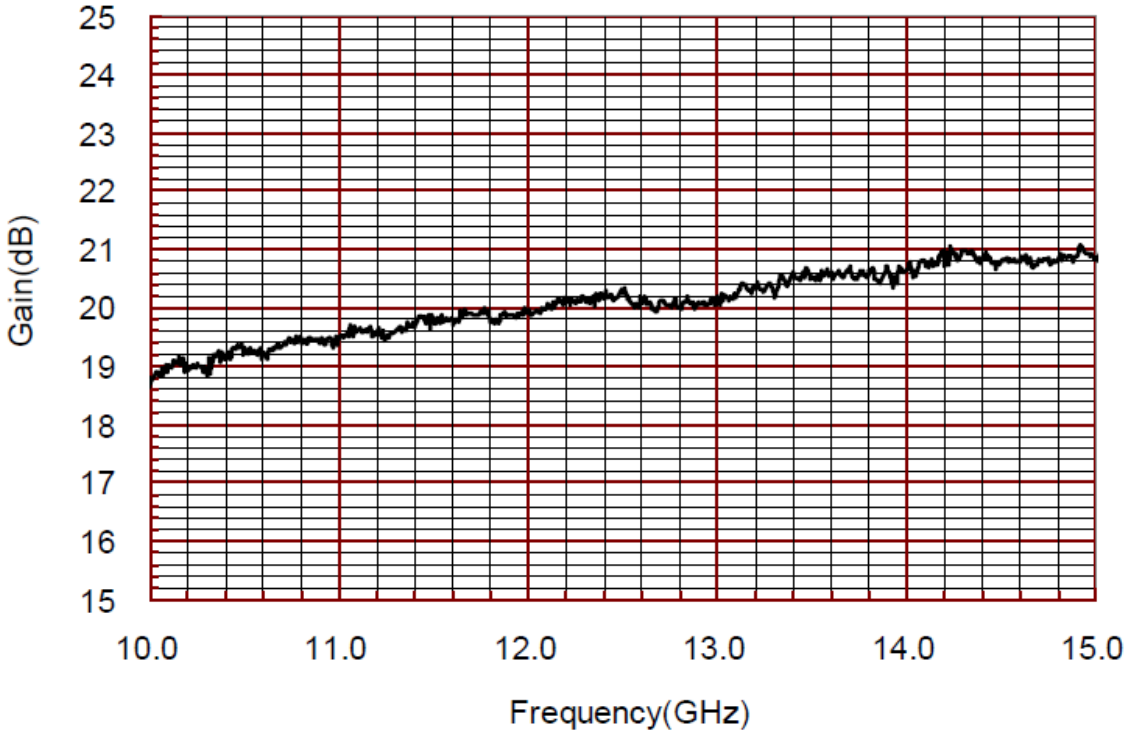

2、Antenna Factor

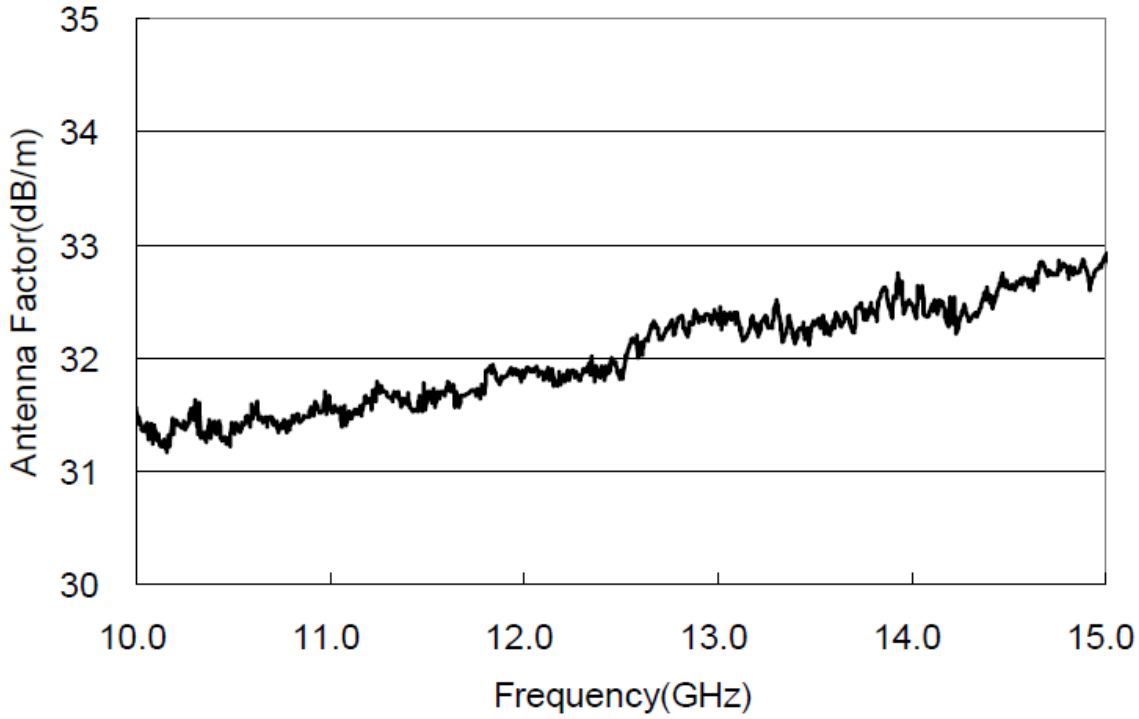

Frequency(GHz)	Gain(dB)	Antenna Factor(dB/m)
10.00	18.79	31.42
10.50	19.31	31.33
11.00	19.50	31.54
11.50	19.73	31.69
12.00	19.97	31.83
12.50	20.25	31.89
13.00	20.19	32.30
13.50	20.53	32.28
14.00	20.66	32.47
14.50	20.81	32.63
15.00	20.87	32.86

3、VSWR

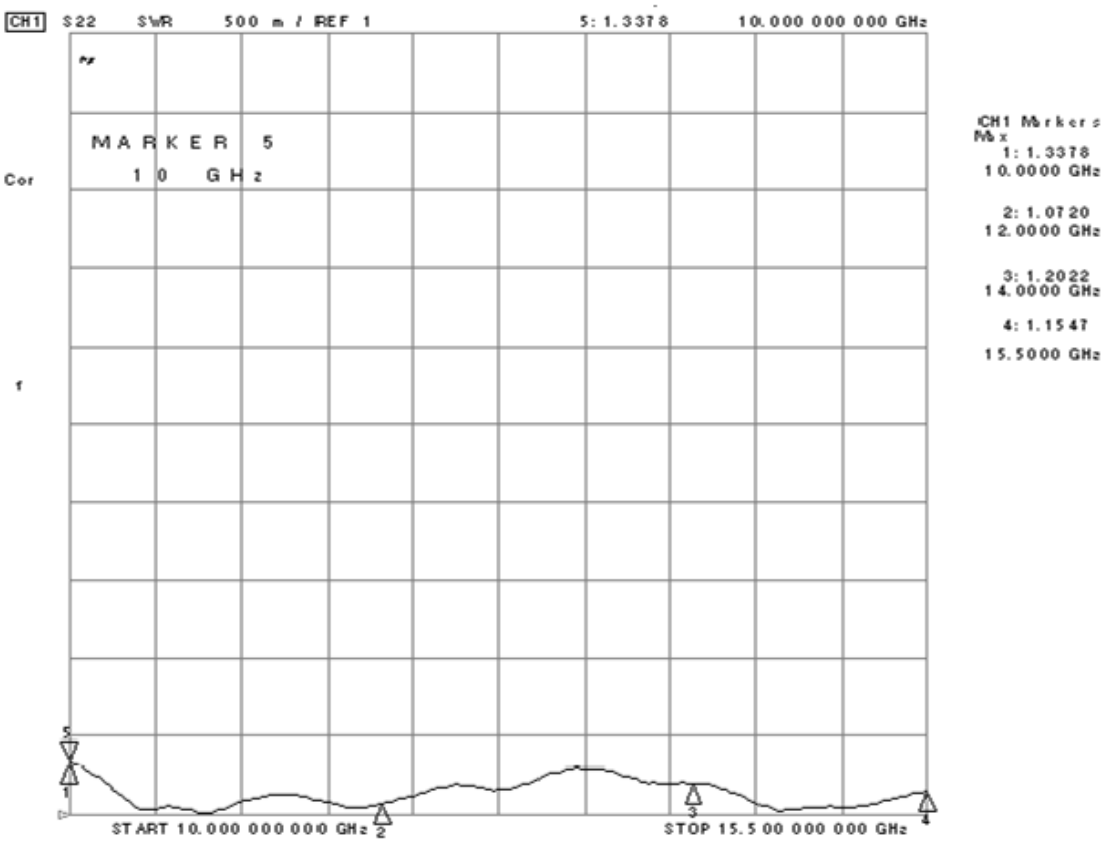

4、Cross Polarization Isolation

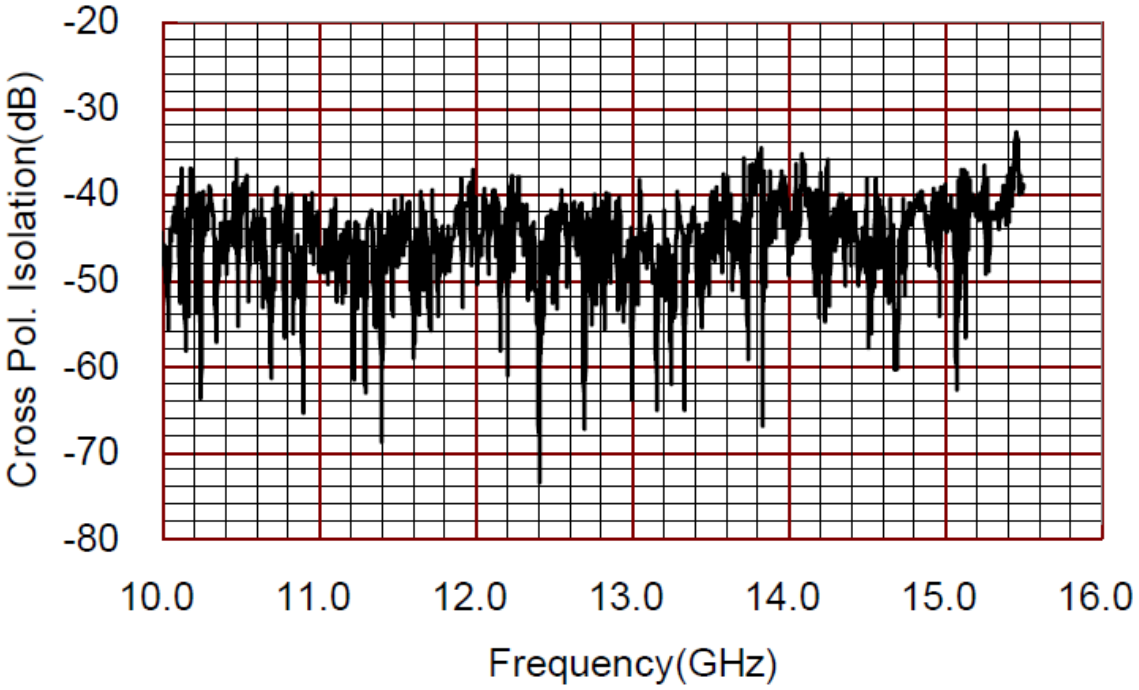

5、Pattern

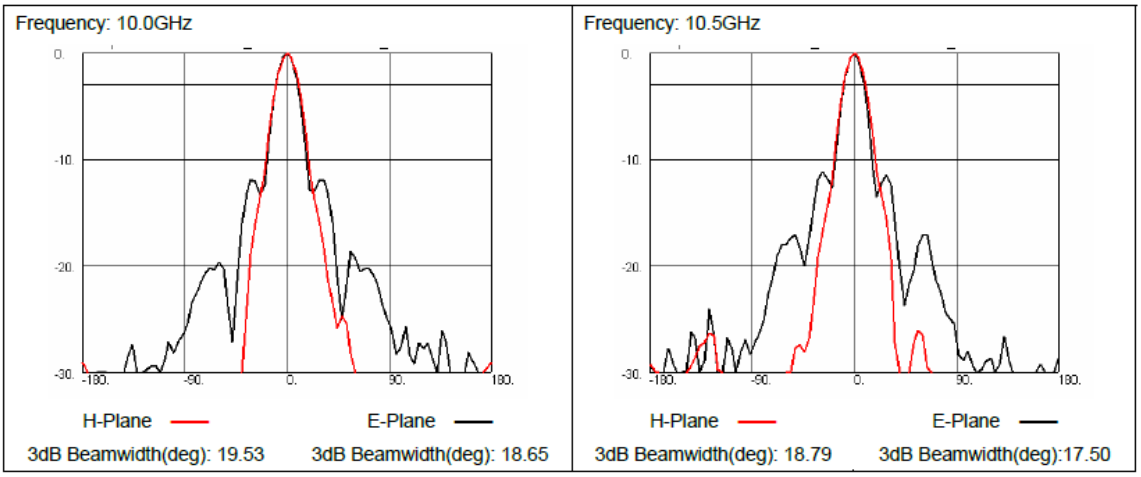

Beijing Ocean Microwave Co Ltd.
TEL：+86-10-60290088
FAX：+86-10-60290088
http://oceanmicrowave.com
E-mail: sales@oceanmicrowave.com

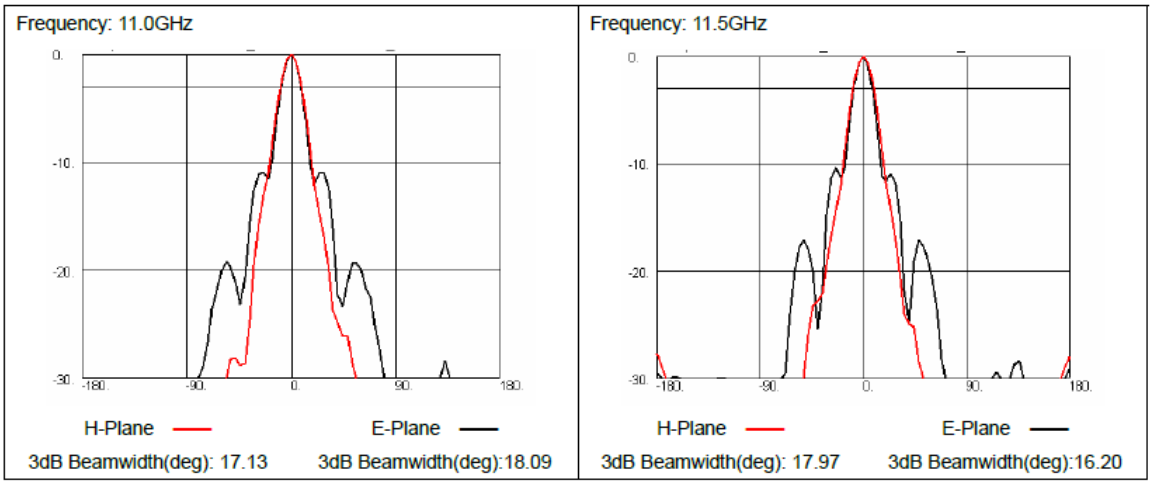

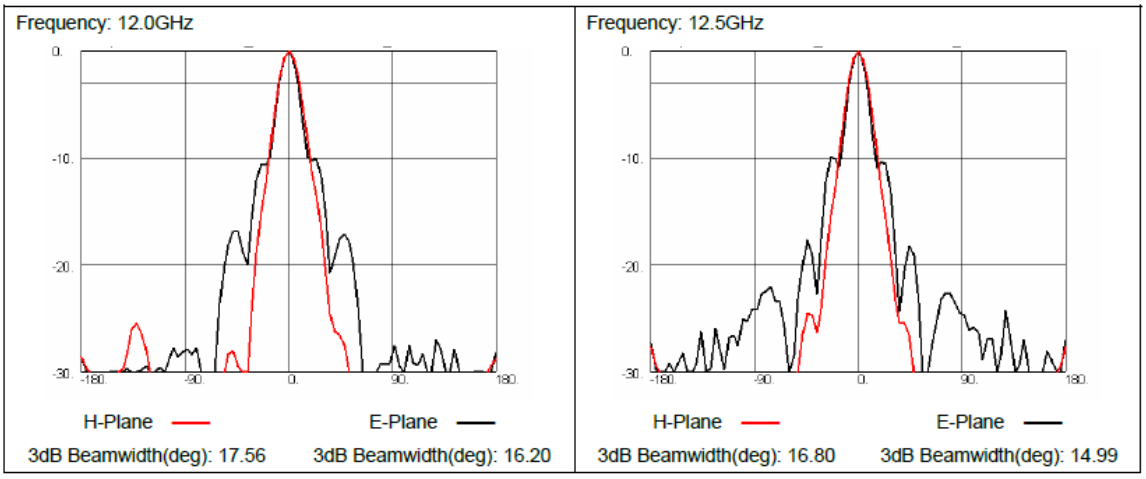

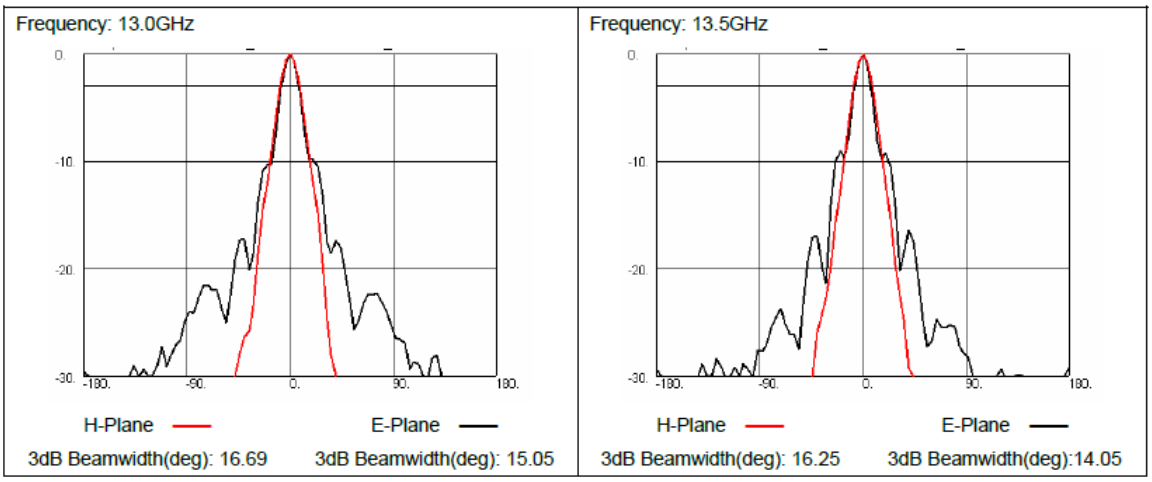

Beijing Ocean Microwave Co Ltd.
TEL：+86-10-60290088
FAX：+86-10-60290088
http://oceanmicrowave.com
E-mail: sales@oceanmicrowave.com

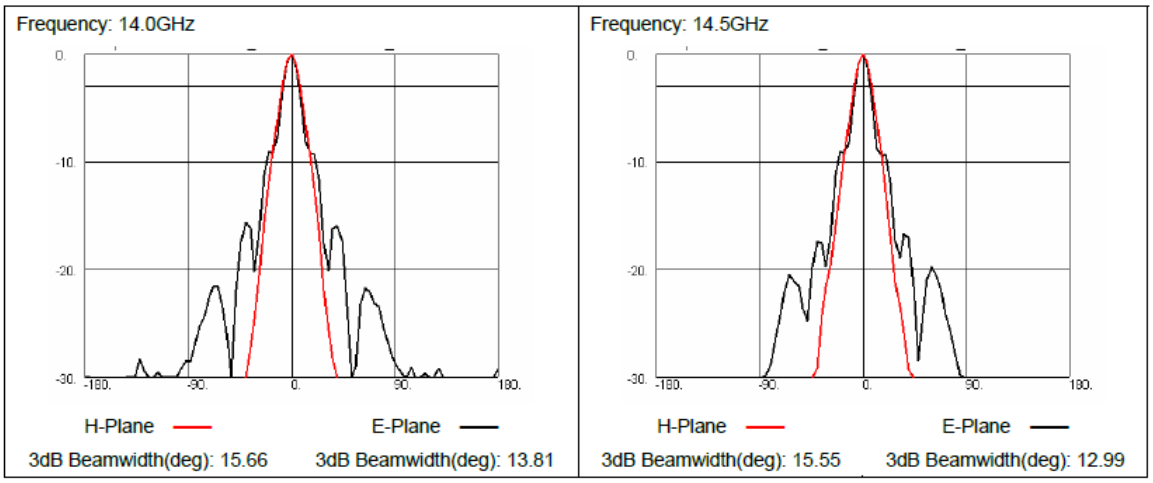

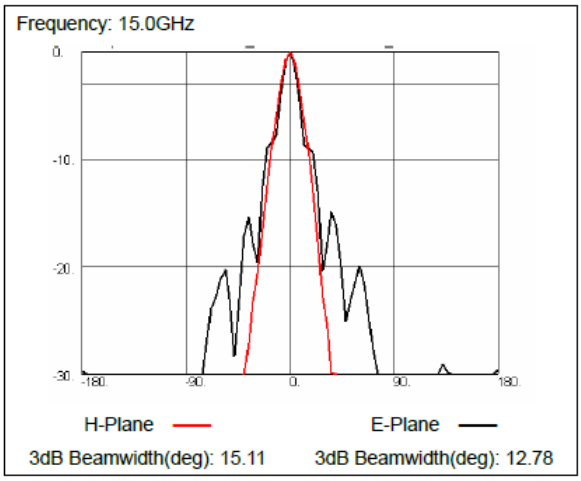

Beijing Ocean Microwave Co Ltd.
TEL：+86-10-60290088
FAX：+86-10-60290088
http://oceanmicrowave.com
E-mail: sales@oceanmicrowave.com