EC MICROWAVE
The door to the RF world

Broadband Horn Antenna

OBH-10125

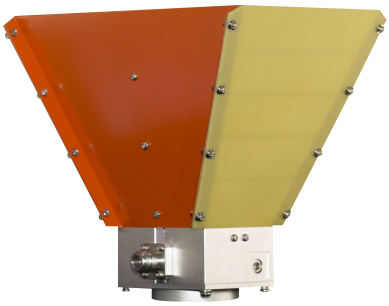

OBH-10125 double ridge horn antennas operate broadband from 1GHz to 12.5GHz .The antenna supports linear polarized waveforms.

This antenna is appropriate to the test of wireless and telecom communication antennas.High gain and low VSWR permit the measurement of weak signals and the generation of high field strengths without any significant return loss.

OBH-10125 is calibrated individually in line with ANSI C63.5-2006, making the antennas ideal for EMC/RF measurements.
OBH-10125's radiation pattern contains only one single main lobe over the entire frequency range without any other side lobes.

The antenna is low weight within 0.5kg and has rugged construction.

Features

- Linear polarized with high polarization purity
- RFrequency from 1GHz to 12.5 GHz
- Low return loss / VSWR
- Wide bandwidth
- Uniform Gain
- High Power Handling Capability
- Radiation pattern contains only one main lobe over the entire frequency range
- Each antenna is calibrated individually in line with ANSI C63.5-2006

PRODUCT DIMENSIONS

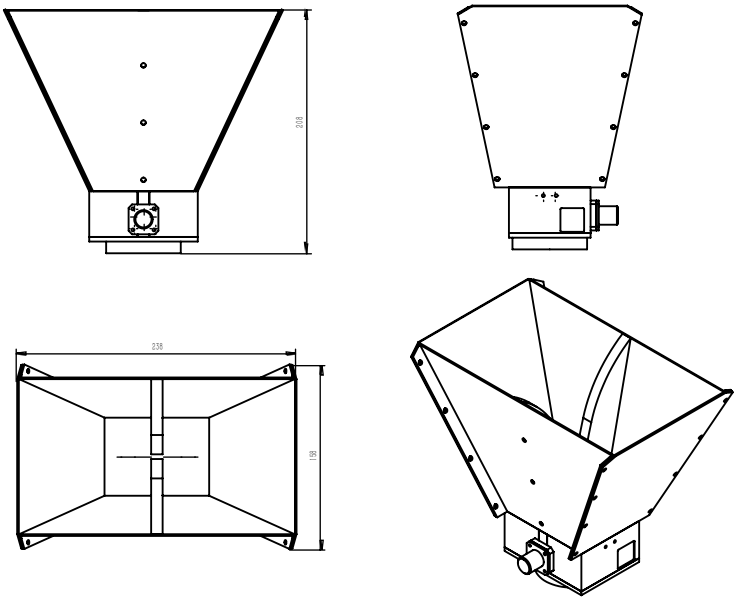

Electrical Specifications

Part Number	OBH-10125
Type of Antenna	Dual-Ridge Horn
Frequency Range	1-12.5GHz
Gain	8-13dB
VSWR	<2.7
Polarization	Single Linear
Cross-Polar Discrimination	>25dB
Impedance	50Ohms

GAIN

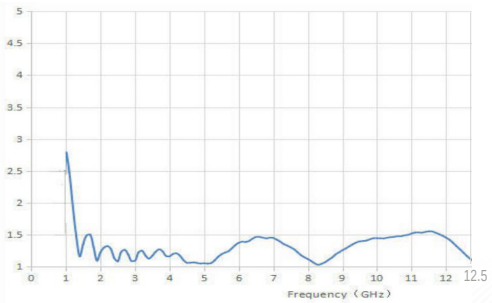

VSWR

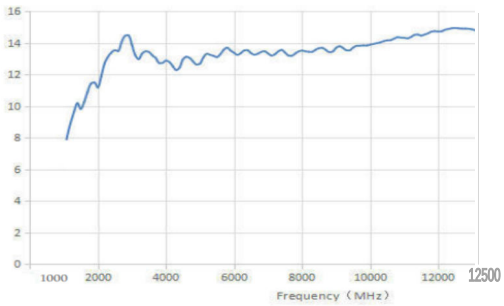

EC Microwave is trademark of Ocean Microwave
All rights of respective trademark owners reserved.
© EC Microwave 2017