Micro-strip Series (Single)

Outline Drawing	Part Number	Frequency Range (GHz)	Insertion Loss (dB Max)	Isolation (dB Min)	VSWR (Max)	Operating Temperature (℃)	Load Power (W)	Connector Type
E01	WG502A5	5.0-6.0	0.5	18	1.25	-55 ~ +85	10	GWB
E02	WG702A	7.1-8.5	0.5	20	1.35	-55 ~ +85	10	GWB
E03	WG702A1	7-7.5	0.5	20	1.25	-55 ~ +85	0.5	GWB
E04	WG702A3	7-8.5	0.6	18	1.3	-55 +85	10	GWB
E05	WG702A5	5.8-7.2	0.5	18	1.25	-55 +85	10	GWB
E06	WG902A	8.8-9.8	0.5	20	1.25	-55 ~ +85	0.5	GWB
E07	WG902A2	11.9-12.2	0.5	20	1.25	-55 ~ +85	0.5	GWB
E08	WG902A3	10.5-10.9	0.5	20	1.25	-55 ~ +85	10	GWB
E09	WG902A7	8.5-10.5	0.5	18	1.25	-55 ~ +85	20	GWB
E10	WG902A11	13-15	0.6	18	1.3	-55 ~ +85	0.5	GWB
E11	WG902A12	8.5-10.5	0.5	18	1.3	-55 ~ +85	0.5	GWB
E12	WG902A19	8-12	0.6	17	1.35	-55 ~ +85	10	GWB
E13	WG1202A	8-18	1.2	11	1.6	-55 ~ +85	5	GWB
E14	WG1502A8	16-17	0.6	18	1.3	-55 +85	10	GWB
E15	WG1502A10	14.2-16	0.6	17	1.35	-55 +85	10	GWB
E16	WG1502A16	12-17	0.8	15	1.45	-55 +85	10	GWB
E17	WG2002A	18.2-21.2	0.8	17	1.4	-55 ~ +85	0.5	GWB
E18	WG2602A2	24.5-28.35	1.2	18	1.4	-55 ~ +85	0.5	GWB
E19	WG2802A1	29-31	1.2	18	1.4	-55 ~ +85	0.5	GWB
E20	WG3002A3	32-36	1.3	15	1.5	-55 ~ +85	0.5	GWB
E21	WG3002A8	30.4-33.4	1.2	15	1.4	-55 ~ +85	0.5	GWB
E22	WG4002A	43.5-45.5	1.5	15	1.5	-55 ~ +85	0.5	GWB
E23	WH502A2	5.0-6.0	0.6	17	1.35	-55 ~ +85	/	GWB
E24	WH502A3	5.2-5.9	0.5	18	1.3	-55 ~ +85	/	GWB
E25	WH702A1	6.5-7.1	0.5	18	1.3	-55 +85	/	GWB
E26	WH902A2	8.6-10.6	0.6	17	1.35	-55 +85	/	GWB
E27	WH902A3	8-12	0.6	17	1.35	-55 ~ +85	/	GWB
E28	WH902A5	8-12	0.6	16	1.4	-55 ~ +85	/	GWB
E29	WH1502A6	14-18	0.7	16	1.4	-55 ~ +85	/	GWB
E30	WH1502A9	12-17	0.8	15	1.45	-55 ~ +85	/	GWB
E31	WH1502A18	14.5-15.5	0.5	20	1.25	-55 ~ +85	/	GWB
E32	WH2002A	19.5-23	0.8	15	1.4	-55 ~ +85	/	GWB
E33	WH2602A2	24.5-26.5	1	16	1.4	-55 ~ +85	/	GWB
E34	WH3002A2	34-36	1.2	16	1.4	-55 ~ +85	/	GWB
E35	WH3002A3	34-36	1.2	16	1.4	-55 +85	/	GWB

Note All the specifications above are at room temperature(25℃±5℃)

EC Microwave is trademark of Ocean Microwave
All rights of respective trademark owners reserved.
© EC Microwave 2017

Outline Drawing	Part Number	Frequency Range (GHz)	Insertion Loss (dB Max)	Isolation (dB Min)	VSWR (Max)	Operating Temperature (°C)	Load Power (W)	Connector Type
E36/E37	WH502AS5/ WH502AS6	5.1-5.7	0.5(2->3) 1.0(3->1)	20(3->2) 38(1->3)	1.3	-55 +85	10	GWB
E38	WH502AS7	5.2-5.7	0.4(1->2) 0.7(2->3)	20(2->1) 39(3->2)	1.25	-55 ~ +85	10	GWB
E39	WH902AS10	8-12	0.6(2->1) 1.2(3->2)	16(1->3) 30(2->3)	1.3	-55 ~ +85	20	GWB
E40	WH1202AS1	11.5-13.5	0.6(1->2) 1.1(2->3)	18(2->1) 30(3->2)	1.3	-55 +85	10	GWB
E41	WH1502AS4-1	15.5-17.9	0.65(2->1) 1.1(1->3)	18(1->2) 30(3->1)	1.3	-55 ~ +85	10	GWB
E42/E43	WH1502AS8/ WH1502AS12	15.7-17.7	0.6(1->2) 1.1(2->3)	18(2->1) 30(3->2)	1.3	-55 ~ +85	20	GWB
E44	WH1502AS10/ WH1502AS14	14.5-16	0.6(1->2) 1.2(2->3)	17(2->1) 30(3->2)	1.3	-55 +85	10	GWB
E45/E46	WH1502AS18	14-18	0.8(1->2) 1.5(2->3)	15(2->1) 30(3->2)	1.45	-55 +85	20	GWB
E47	WH1602AS	16.4-17.2	0.5(1->2) 0.9(2->3)	23(2->1) 23(3->1)	1.25	-55 ~ +85	10	GWB

Note All the specifications above are at room temperature (25 C±5 C)

EC Microwave is trademark of Ocean Microwave
All rights of respective trademark owners reserved.
© EC Microwave 2017

E01 WG502A5

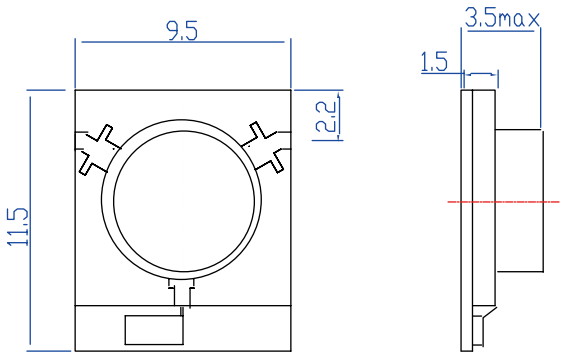

E02 WG702A

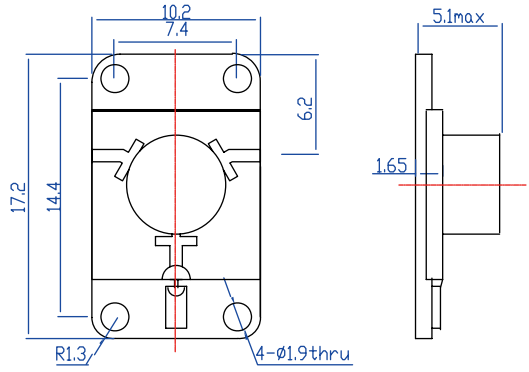

E03 WG702A1

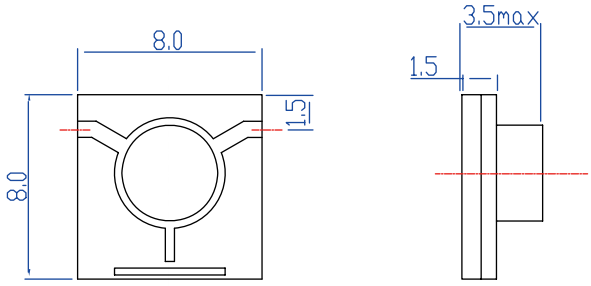

E04 WG702A3

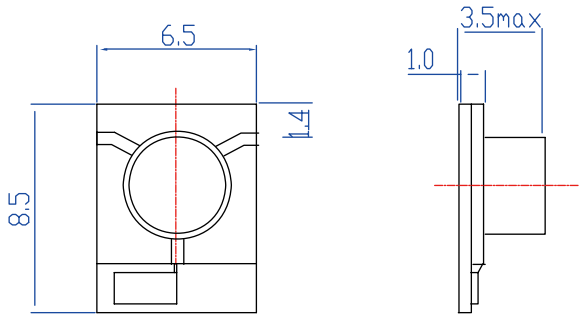

E05 WG702A5

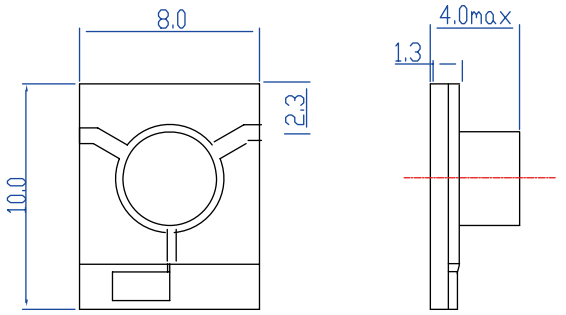

E06 WG902A

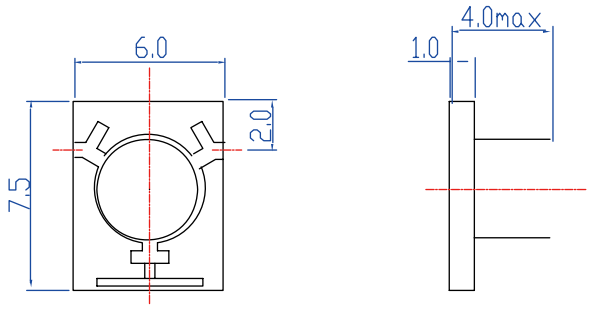

Note All dimensions are in mm

EC Microwave is trademark of Ocean Microwave
All rights of respective trademark owners reserved.
© EC Microwave 2017

E07 WG902A2

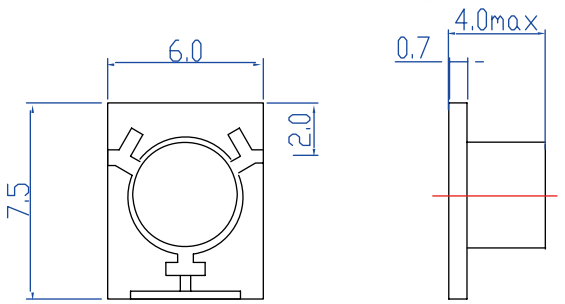

E08 WG902A3

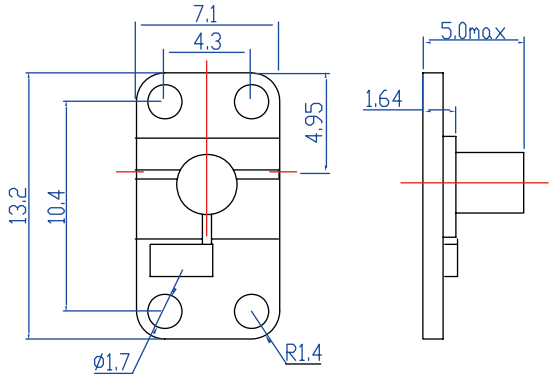

E09 WG902A7

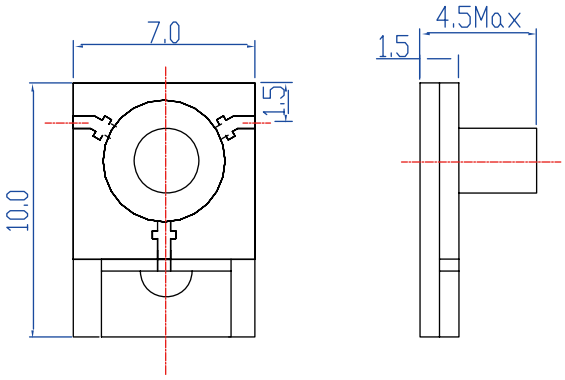

E10 WG902A11

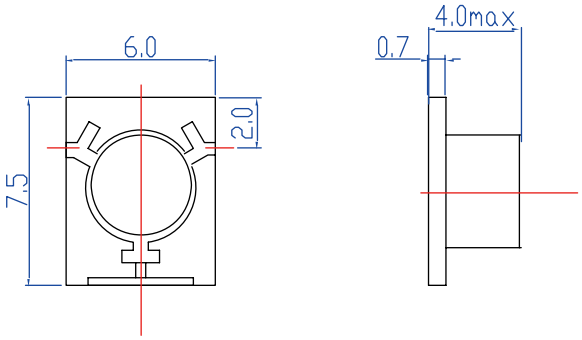

E11 WG902A12

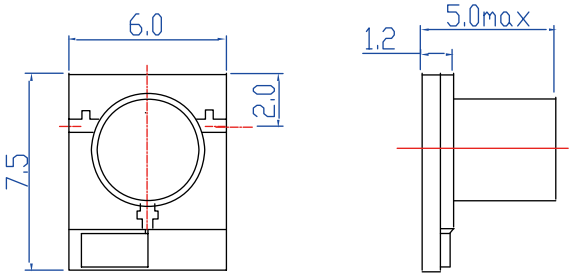

E12 WG902A19

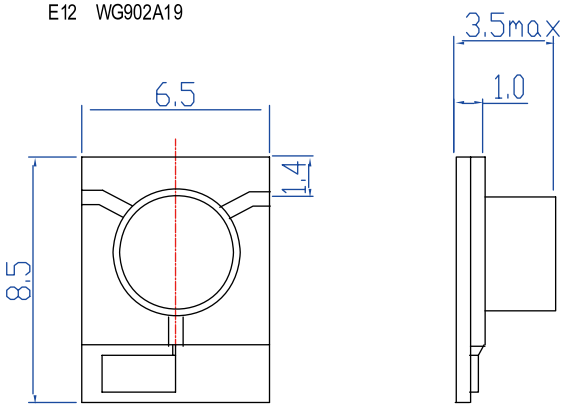

Note All dimensions are in mm

EC Microwave is trademark of Ocean Microwave
All rights of respective trademark owners reserved.
© EC Microwave 2017

E13 WG1202A

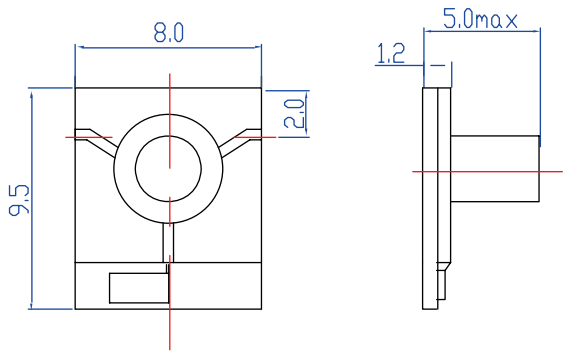

E14 WG1502A8

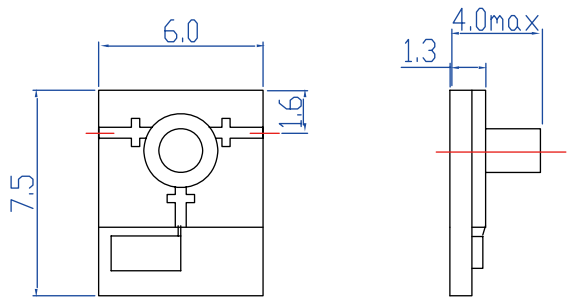

E15 WG1502A10

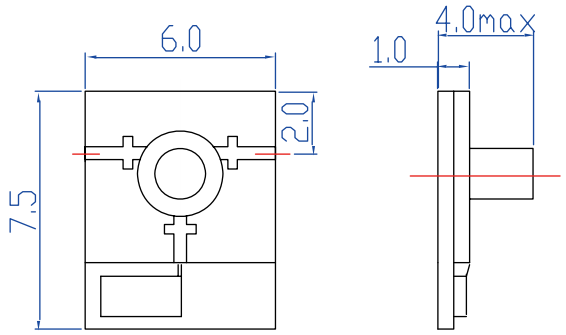

E16 WG1502A16

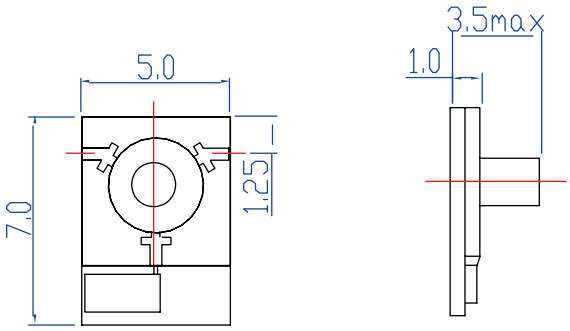

E17 WG2002A

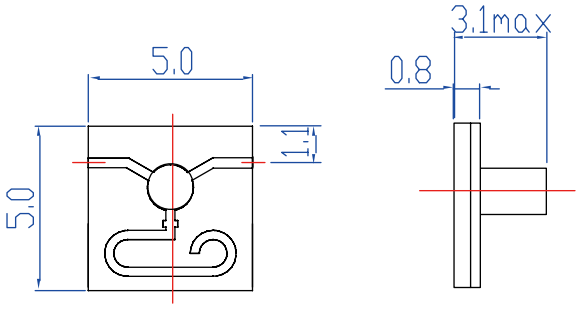

E18 WG2602A2

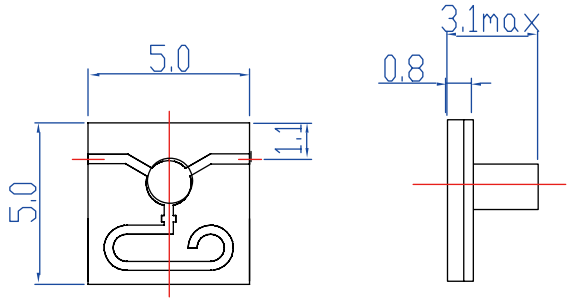

Note All dimensions are in mm

EC Microwave is trademark of Ocean Microwave
All rights of respective trademark owners reserved.
© EC Microwave 2017

E19 WG2802A1

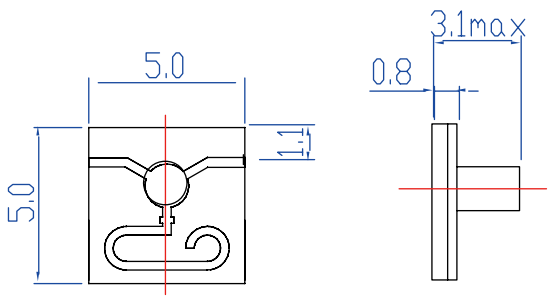

E20 WG3002A3

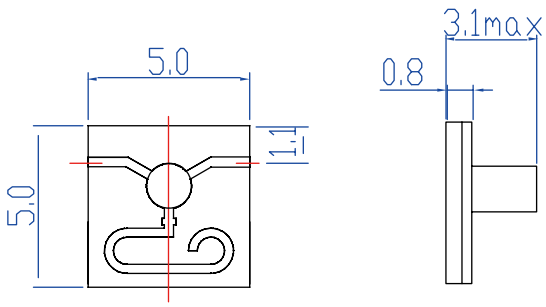

E21 WG3002A8

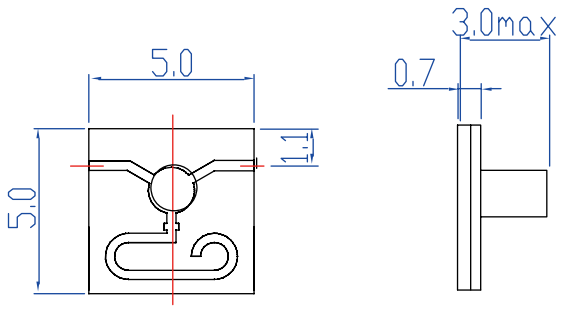

E22 WG4002A

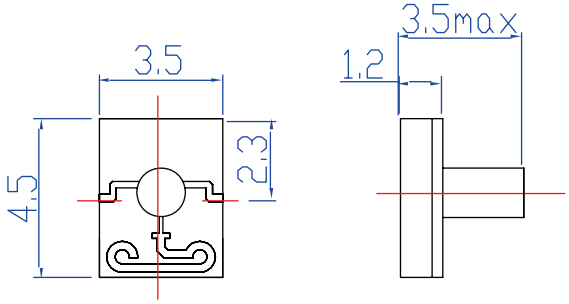

E23 WH502A2

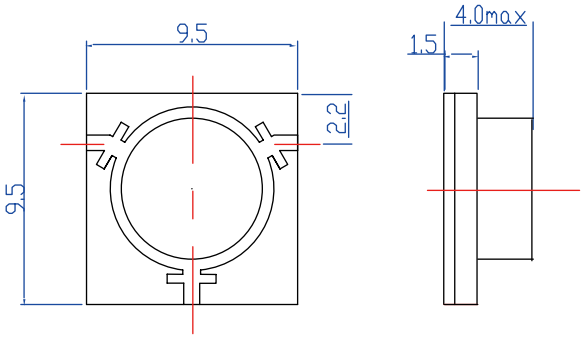

E24 WH502A3

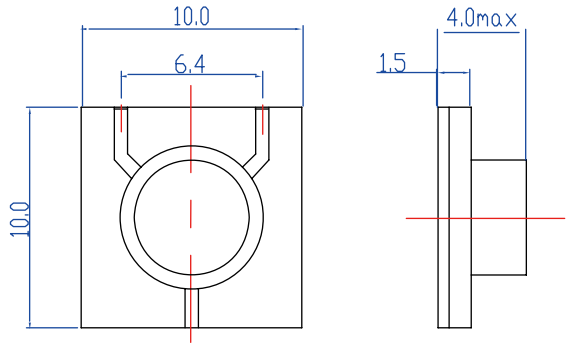

Note All dimensions are in mm

EC Microwave is trademark of Ocean Microwave
All rights of respective trademark owners reserved.
© EC Microwave 2017

E25 WH702A1

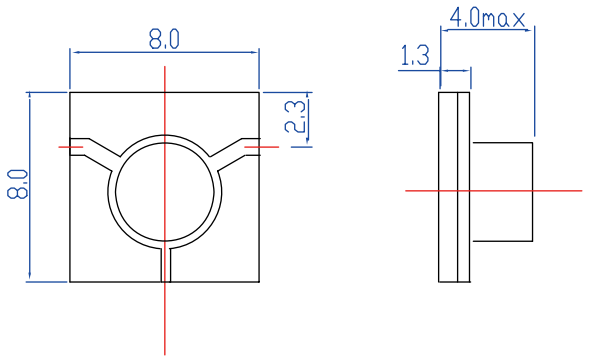

E26 WH902A2

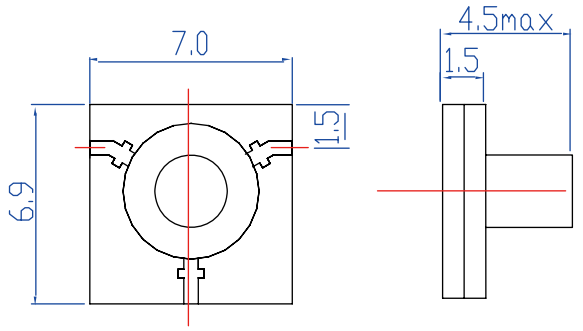

E27 WH902A3

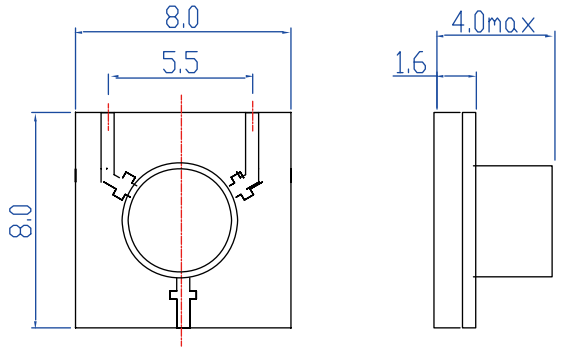

E28 WH902A5

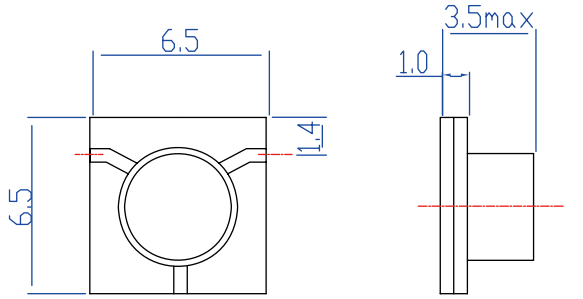

E29 WH1502A6

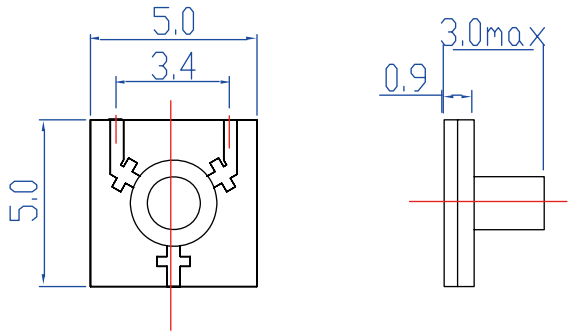

E30 WH1502A9

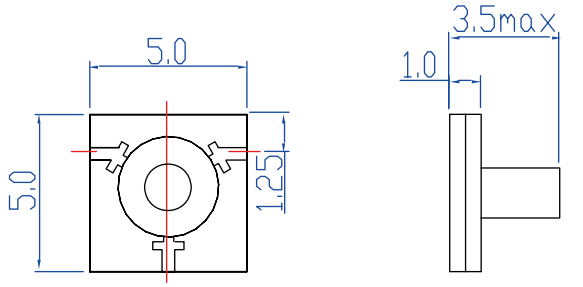

Note All dimensions are in mm

EC Microwave is trademark of Ocean Microwave
All rights of respective trademark owners reserved.
© EC Microwave 2017

E31 WH1502A18

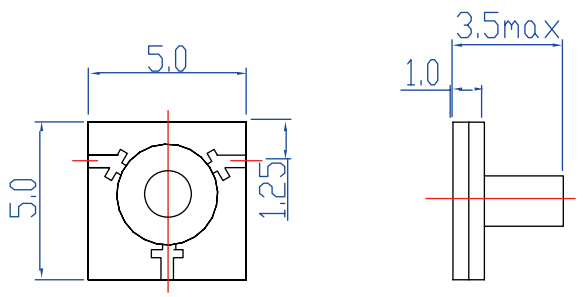

E32 WH2002A

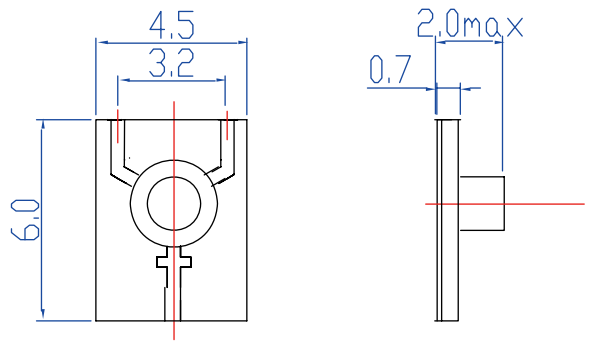

E33 WH2602A2

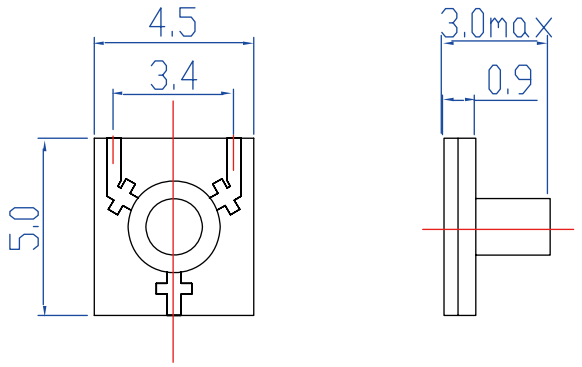

E34 WH3002A2

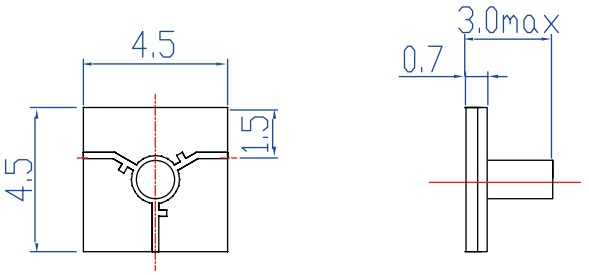

E35 WH3002A3

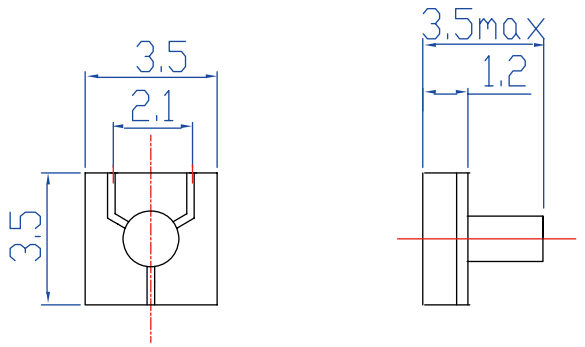

Note All dimensions are in mm

EC Microwave is trademark of Ocean Microwave
All rights of respective trademark owners reserved.
© EC Microwave 2017

E36 WH502AS5

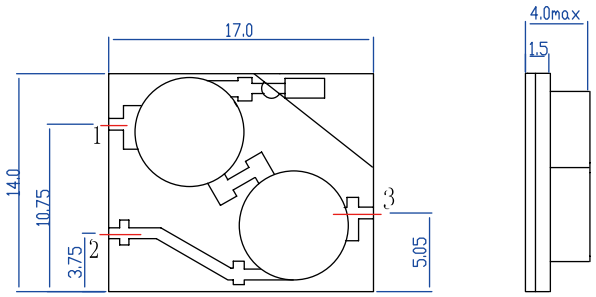

E37 WH502AS6

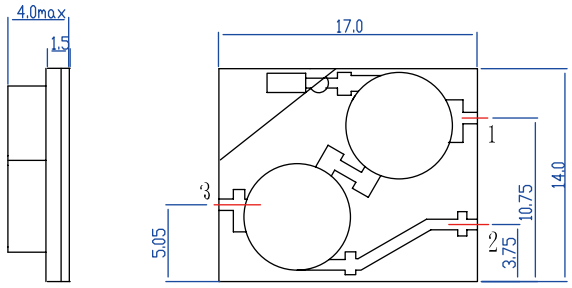

E38 WH502AS7

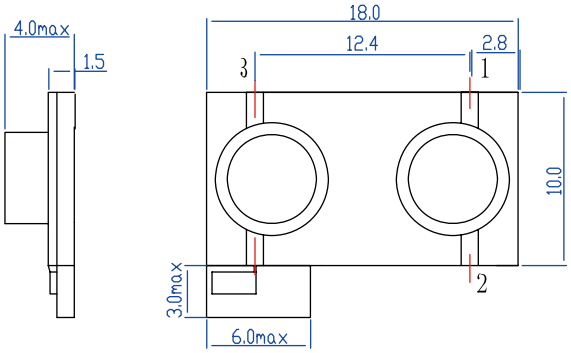

E39 WH902AS10

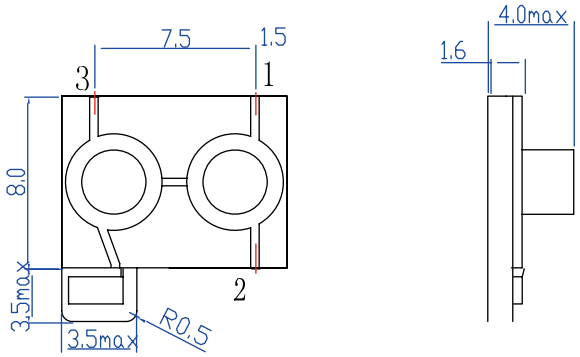

E40 WH1202AS1

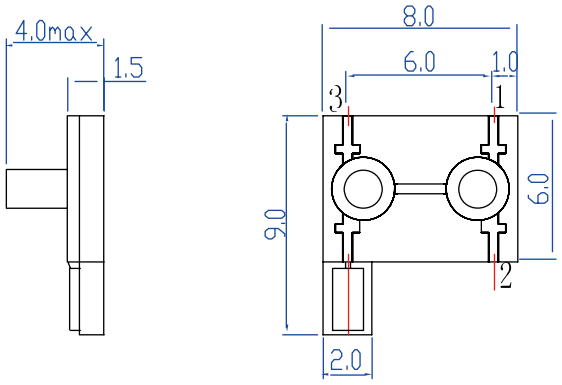

E41 WH1502AS4-1

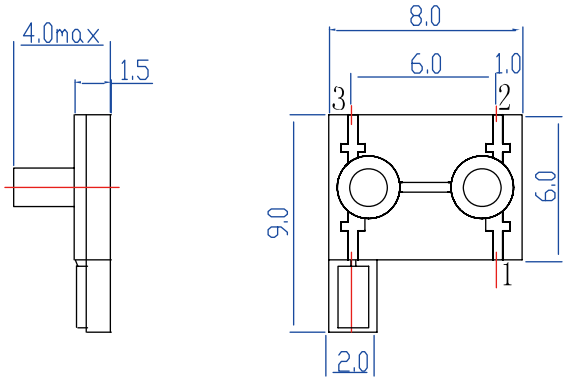

Note All dimensions are in mm

EC Microwave is trademark of Ocean Microwave
All rights of respective trademark owners reserved.
© EC Microwave 2017

E42 WH1502AS8

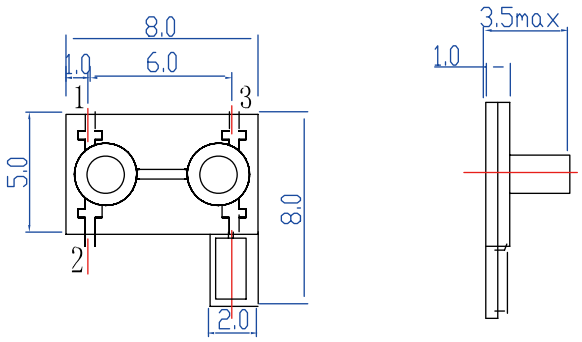

E43 WH1502AS12

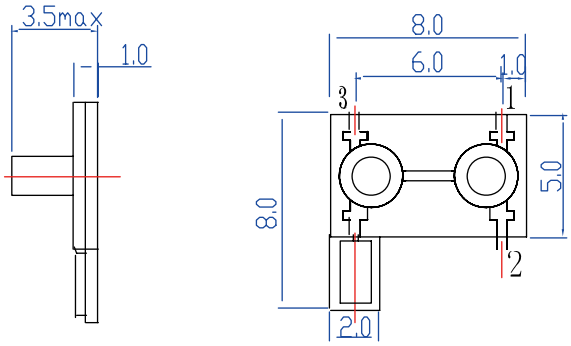

E44 WH1502AS10

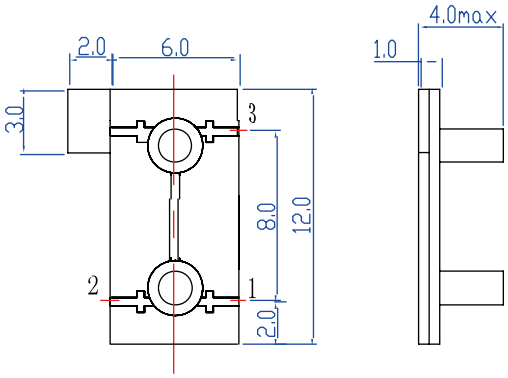

E45 WH1502AS14

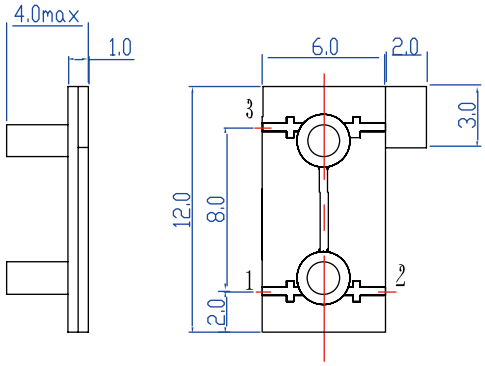

E46 WH1502AS18

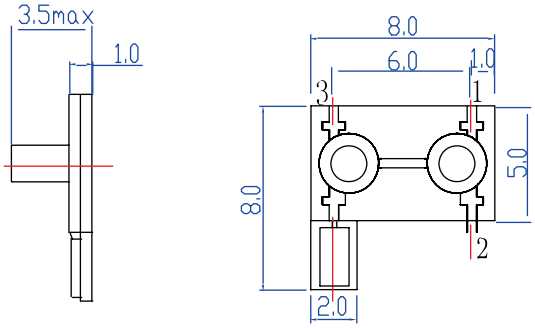

E47 WH1602AS

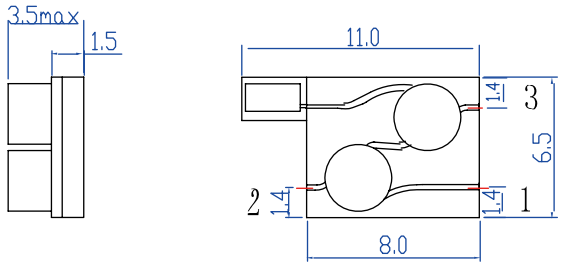

Note All dimensions are in mm

EC Microwave is trademark of Ocean Microwave
All rights of respective trademark owners reserved.
© EC Microwave 2017