RFecho
A Gateway to RF World

Type N Jack (Female) 4 Hole .687 Square D340-P20-F07

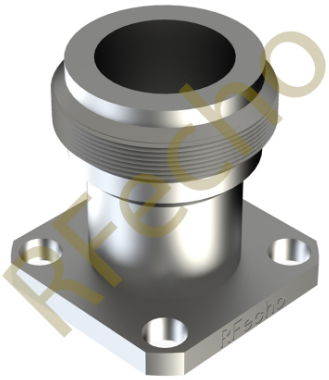

"This is model D340-P20-F07, The N connectors are durable, operational temperature rating of -55°C to +165°C. N connectors provide mode-free operation through 18.0 GHz, lowest VSWR and RF leakage (≤ -100 dB)."

Features

- low VSWR
- free through 18 GHz and less than -100 dB RF leakage.

Available Accesories

- 50 ohm Seal

Applications

- Telecom Communication
- Sub-assemblies
- Radio equipment and instruments
- Wireless Communication
- Test Labs
- Instrumentations

Electrical Specifications

Frequency	18 GHz
Flange Size	.687 SQ
Mounting	4-Hole Flange
Hermetic Seal Available	YES
Accepts Pin Diameter	.020
Gender	Female
Flange Hole Diameter	0.125
Tools, C-bore	T-291-4

Isolation & VSWR

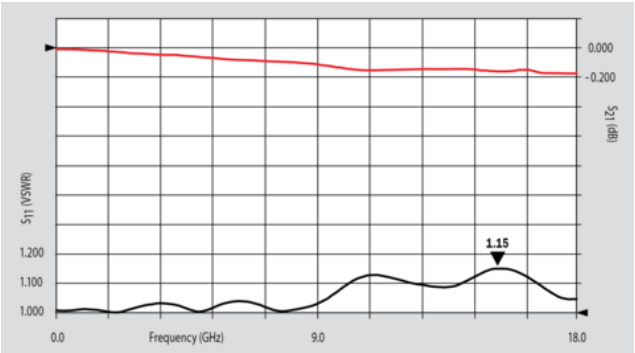

PRODUCT DIMENSIONS

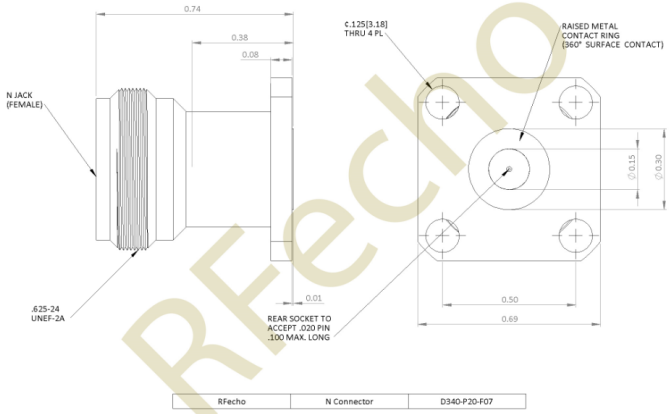

EC Microwave is trademark of Ocean Microwave
All rights of respective trademark owners reserved.
© EC Microwave 2017